Bangladesh Army University of Engineering & Technology
Department of Electrical & Electronic Engineering

Lecture: 26 - 29

Course Code: EEE 1261

Course Title: Electronic Devices and Circuits

Course Teacher: Ferdous Farjana

Designation: Lecturer, Dept. of EEE, BAUET

Outline

- ❖Silicon Controlled Rectifier (SCR): Structure, Working Principle, V-I Characteristics, Applications
- ❖TRIAC (Triode for Alternating Current): Structure, Working Principle, V-I Characteristics, Applications
- ❖DIAC (Diode for Alternating Current): Structure, Working Principle, V-I Characteristics, Applications
- ❖UJT (Unijunction Transistor): Structure, Working Principle, V-I Characteristics, Applications
- ❖Introduction to IC Fabrication Processes

Silicon Controlled Rectifier (SCR)

➢ Structure:

- A four-layer, three-terminal PNPN device.
- Terminals:
  - Anode (A) – connected to outer P-layer.
  - Cathode (K) – connected to outer N-layer.
  - Gate (G) – connected to inner P-layer.

➢ Working Principle:

- In the forward-biased condition (Anode positive w.r.t Cathode), SCR does not conduct until a small positive gate pulse is applied.
- Once triggered, it conducts heavily and remains ON even if the gate signal is removed.
- It turns OFF only when the current falls below a minimum value known as the holding current.

Silicon Controlled Rectifier (SCR)

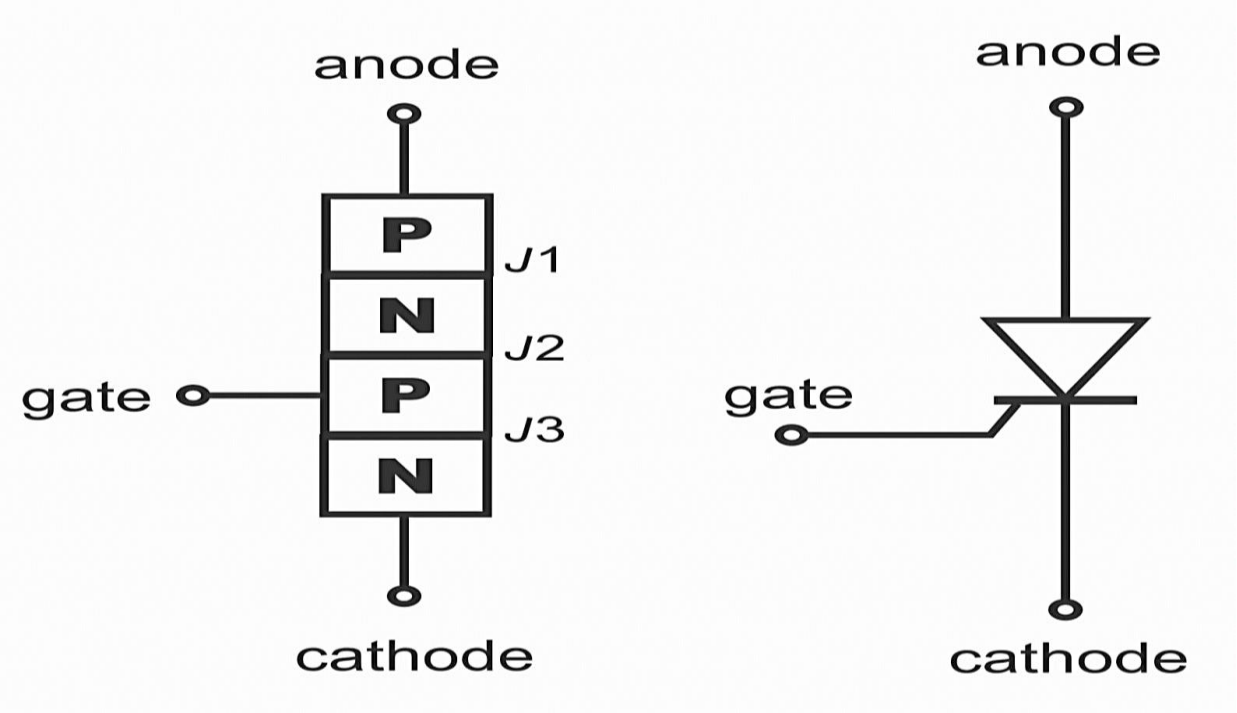

(a) (b)

Fig. 1: (a) SCR structure, and (b) SCR symbol.

Silicon Controlled Rectifier (SCR)

➢ V-I Characteristics:

- **Forward Blocking Region:** No conduction despite forward voltage until gate is triggered.
- **Forward Conduction Region:** Conduction occurs after gate triggering.
- **Reverse Blocking Region:** Blocks current like a diode in reverse bias.

➢ Applications:

- Controlled rectifiers.
- Motor speed control.
- Light dimmers.
- Overvoltage protection circuits.
- Inverters and UPS systems.

Silicon Controlled Rectifier (SCR)

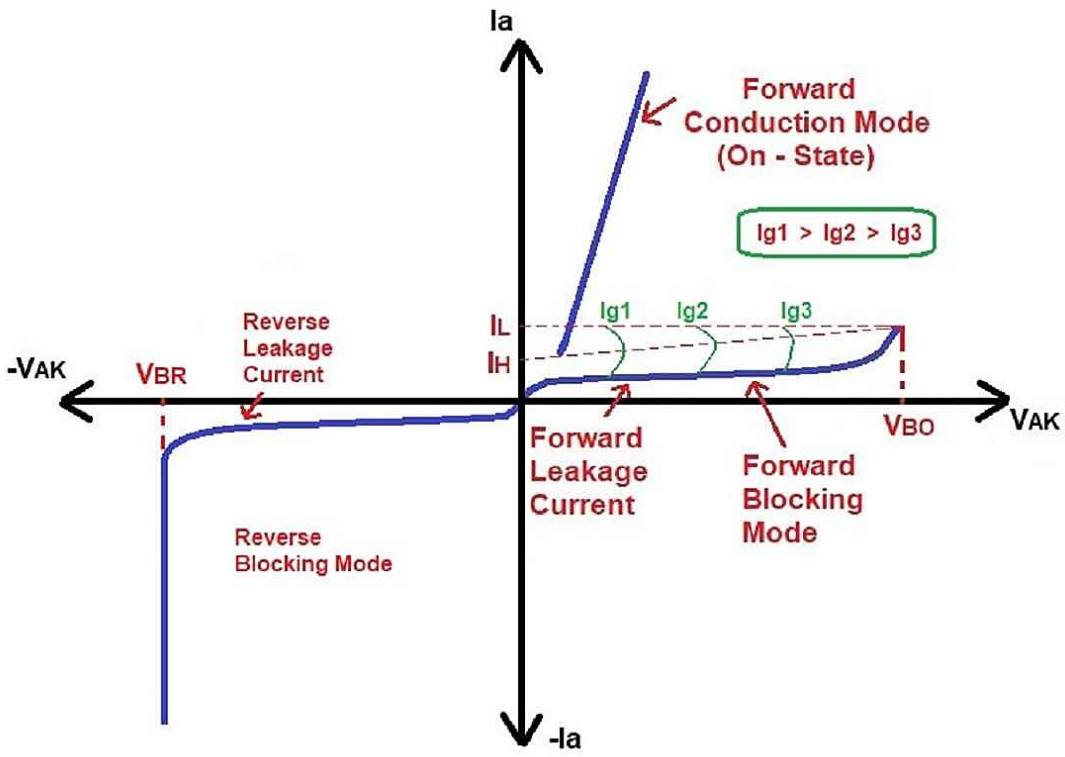

Fig. 2: V-I characteristics curve of SCR.

TRIAC (Triode for Alternating Current)

➢ Structure:

- A bidirectional, three-terminal device similar to two SCRs connected in anti-parallel.
- Terminals:
  - Main Terminal 1 (MT1),
  - Main Terminal 2 (MT2),
  - Gate (G).

➢ Working Principle:

- Can conduct current in both directions when triggered.
- Can be triggered with either positive or negative gate voltage.
- Suitable for AC switching applications.

TRIAC (Triode for Alternating Current)

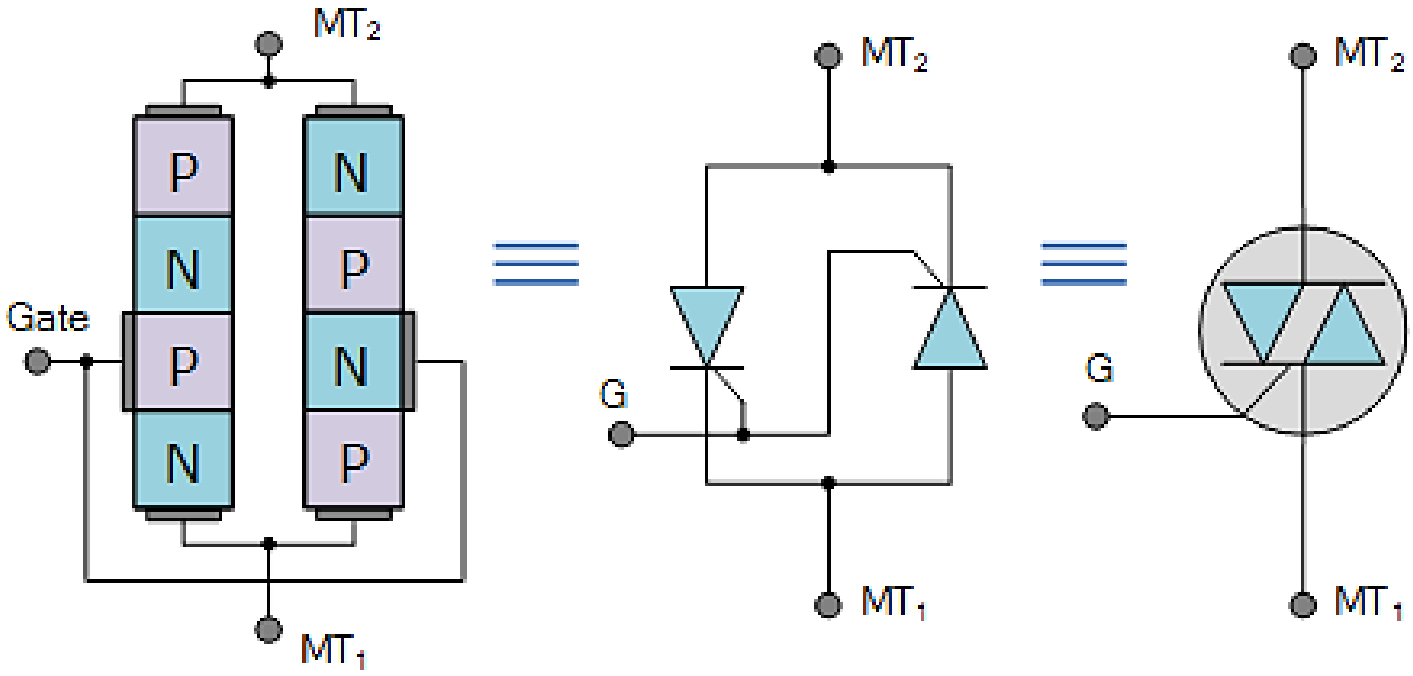

(a) (b) (c)

Fig. 3: (a) TRIAC construction, and (b) TRIAC two-thyristor analogy, and (c) TRIAC Circuit symbol.

TRIAC (Triode for Alternating Current)

➢ V-I Characteristics:

- Has four modes of conduction depending on the polarity of MT1 and the gate.
- Conduction begins when voltage exceeds threshold with a gate pulse.

➢ Applications:

- AC light dimmers.
- Fan speed regulators.
- Phase control of AC power.
- Solid-state relays.

TRIAC (Triode for Alternating Current)

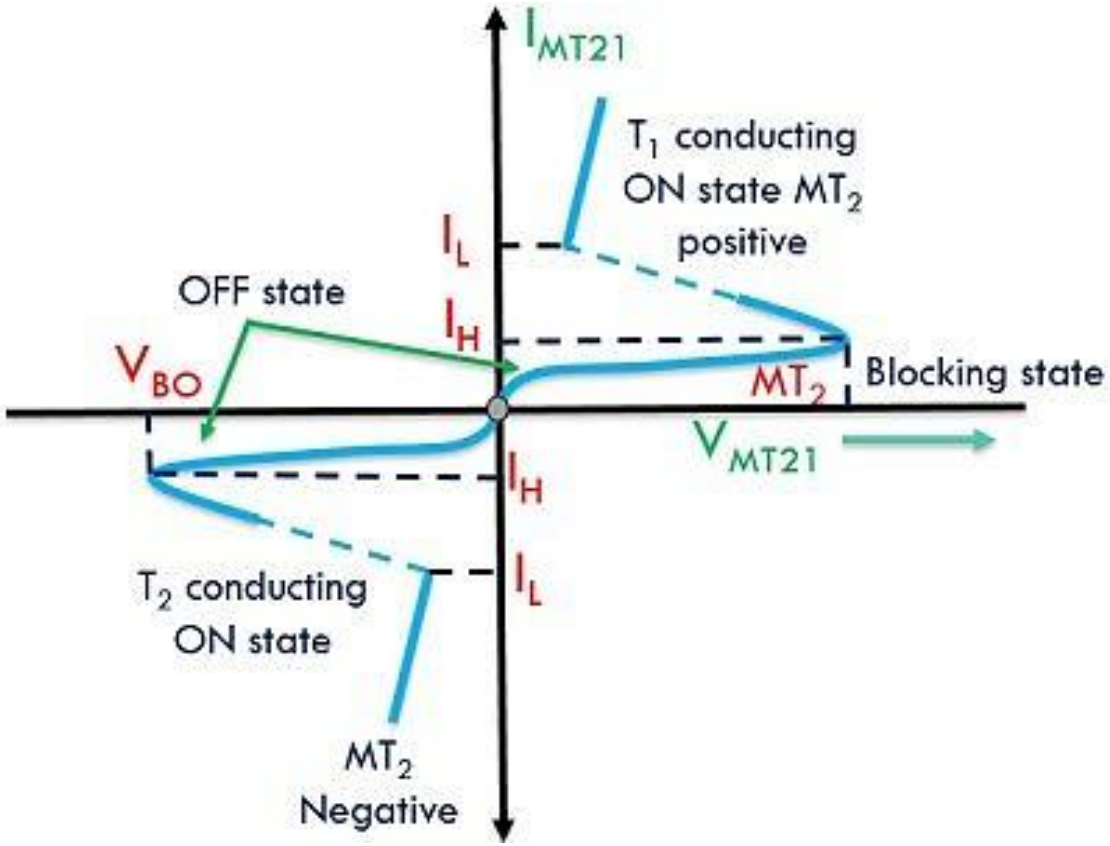

Fig. 4: V-I characteristics curve of TRIAC.

DIAC (Diode for Alternating Current)

➢ Structure:

- A two-terminal symmetrical device.
- Essentially a bidirectional trigger diode made of three layers (PNP or NPN).

➢ Working Principle:

- Remains OFF until the voltage across it exceeds a certain breakover voltage.
- Once triggered, it conducts in the direction of applied voltage.
- Automatically turns OFF when current drops below holding value.

DIAC (Diode for Alternating Current)

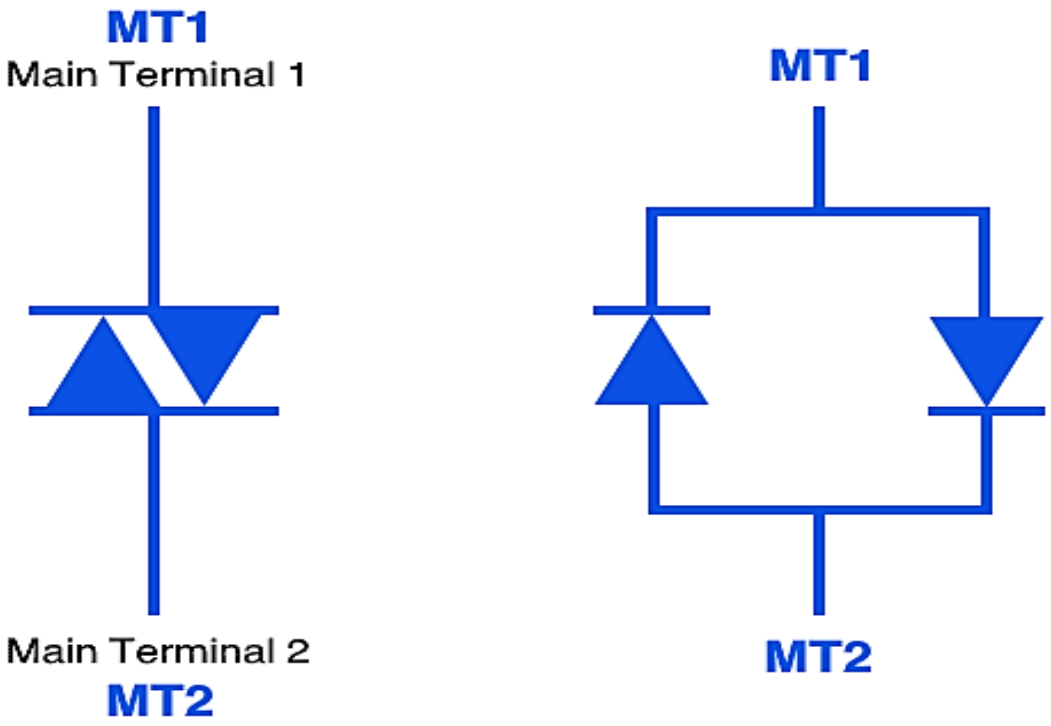

(a) (b)

Fig. 5: (a) DIAC symbol, and (b) DIAC construction.

DIAC (Diode for Alternating Current)

➢ V-I Characteristics:

- Symmetrical in both positive and negative half-cycles.
- Sudden conduction once breakover voltage is reached, with sharp rise in current and drop in voltage.

➢ Applications:

- Commonly used to trigger TRIACs in AC circuits.
- Ensures symmetrical triggering, reducing harmonics.
- Light dimmers, motor controllers, heat control.

DIAC (Diode for Alternating Current)

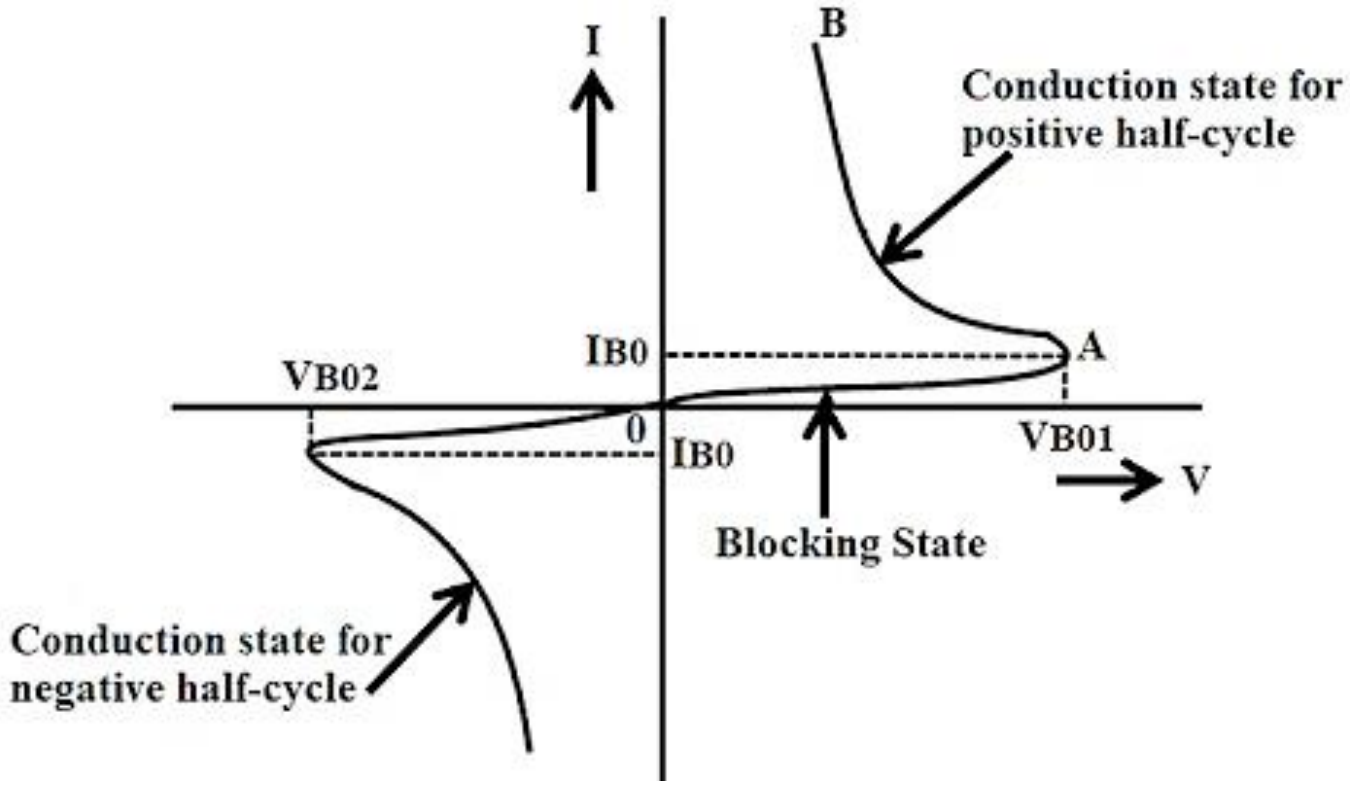

Fig. 6: V-I characteristics curve of DIAC.

UJT (Unijunction Transistor)

➢ Structure:

- Consists of a bar of N-type silicon with a P-type emitter junction.
- Terminals:
  - Emitter (E),
  - Base1 (B1),
  - Base2 (B2).

➢ Working Principle:

- When emitter voltage (V_E) increases beyond a certain point (called peak point), a large current starts to flow.
- After this point, increasing V_E decreases emitter voltage—a region called negative resistance.
- Device turns OFF when the current falls below valley point current.

UJT (Unijunction Transistor)

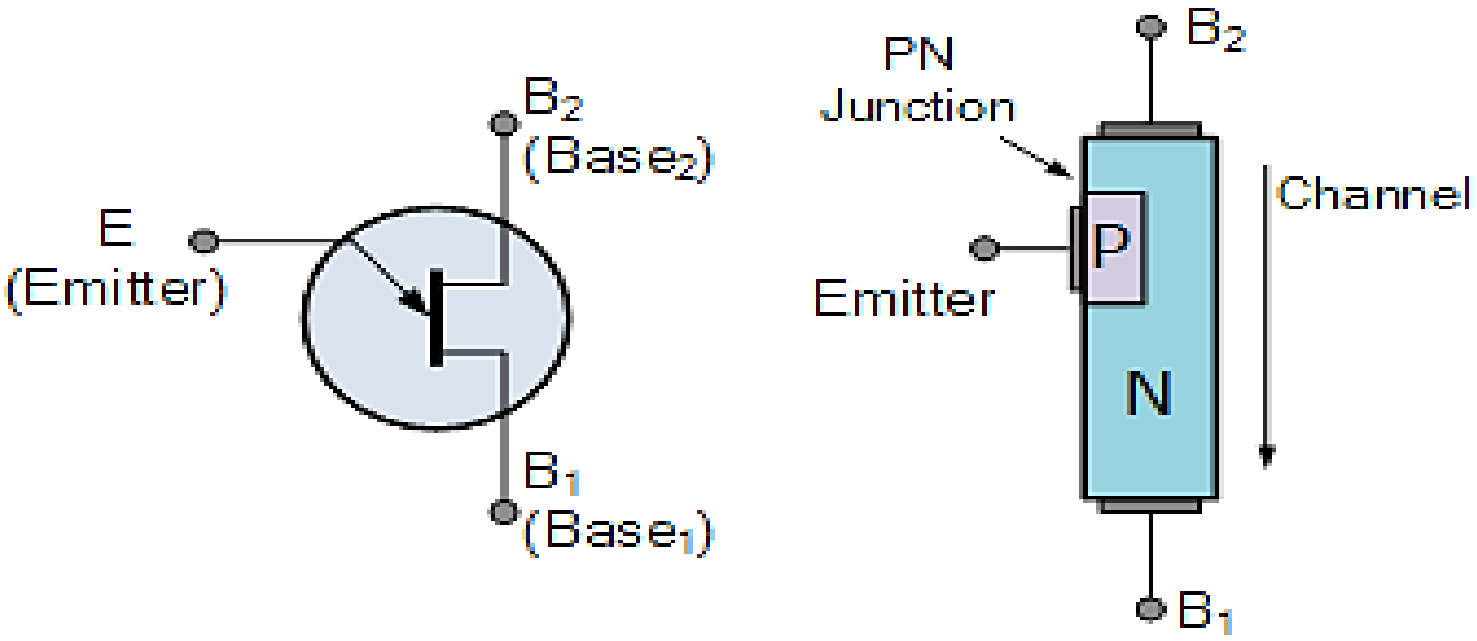

(a) (b)

Fig. 7: (a) UJT symbol, and (b) UJT construction.

UJT (Unijunction Transistor)

➢ V-I Characteristics:

- **Exhibits three regions:**
  - Cut-off (no conduction),
  - Negative resistance (current increases, voltage drops),
  - Saturation (fully conducting).

➢ Applications:

- Relaxation oscillator (to produce timing pulses).
- Triggering circuits for SCR and TRIAC.
- Sawtooth waveform generators.
- Pulse and timing applications.

UJT (Unijunction Transistor)

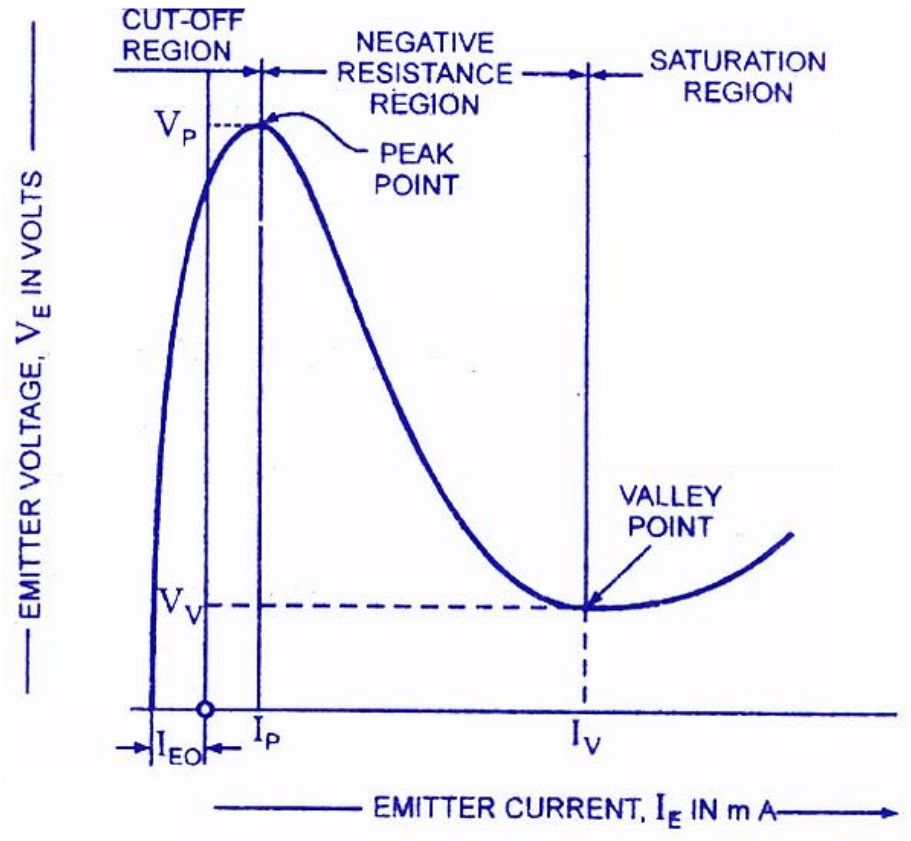

Fig. 8: V-I characteristics curve of UJT.

Introduction to IC Fabrication Processes

✓**IC (Integrated Circuit)** fabrication is the process of creating miniaturized electronic circuits on a semiconductor wafer, typically silicon. The process involves several key steps performed in cleanroom environments to ensure precision and avoid contamination.

✓**Key Steps in IC Fabrication:**

1. **Wafer Preparation**
   - High-purity silicon is melted and formed into a cylindrical ingot.
   - The ingot is sliced into thin wafers, which are polished for circuit fabrication.
2. **Oxidation**
   - A layer of silicon dioxide (SiO_2) is grown on the wafer surface.
   - Acts as an insulating layer and protects the silicon during later steps.

Introduction to IC Fabrication Processes

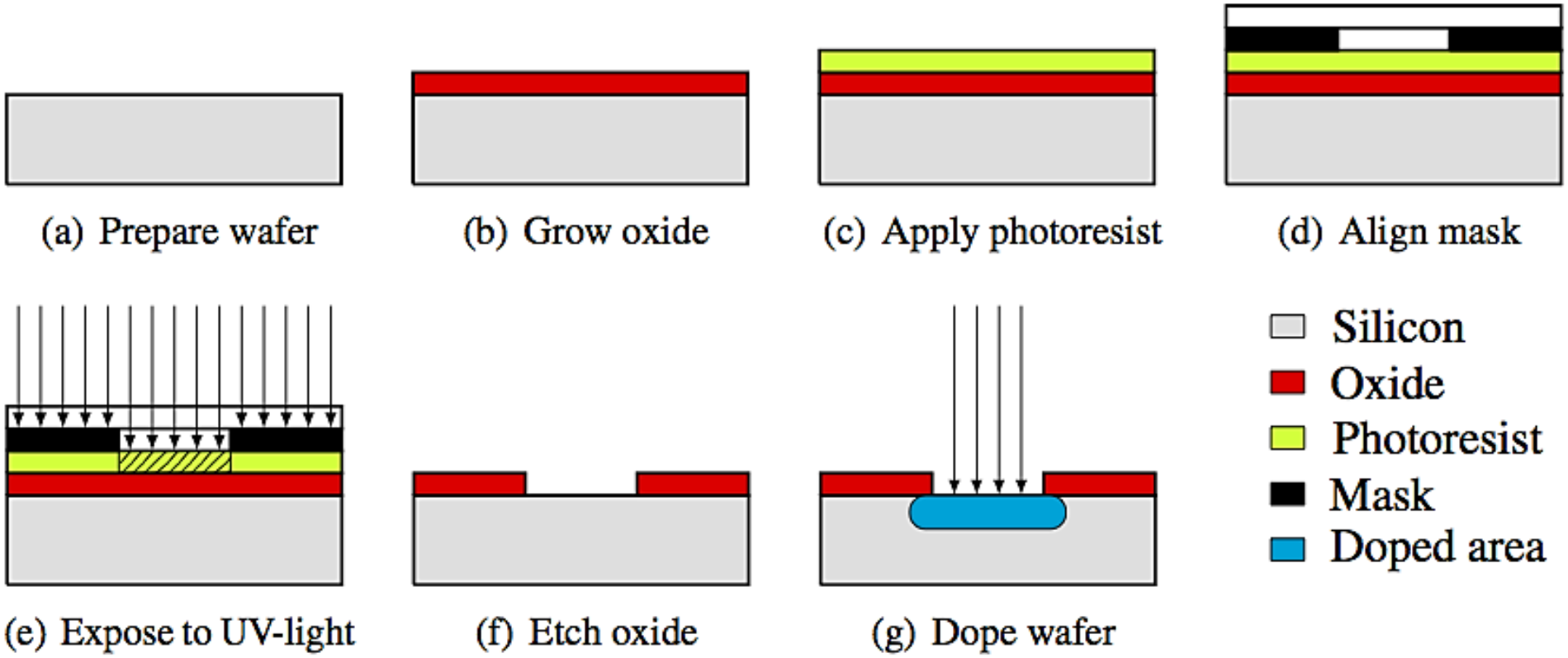

Fig. 9: Basic steps of the IC fabrication process.

Introduction to IC Fabrication Processes

3. **Photolithography**
   - A light-sensitive photoresist is applied.
   - UV light is used to transfer a circuit pattern from a mask onto the wafer.
4. **Etching**
   - Removes unwanted material from areas not protected by the photoresist.
   - Two types: wet etching (chemical) and dry etching (plasma).
5. **Doping (Ion Implantation or Diffusion)**
   - Impurities are added to specific regions to modify electrical properties.
   - Converts intrinsic silicon into n-type or p-type semiconductors.
6. **Deposition**
   - Thin films of materials (like metals or insulators) are deposited onto the wafer.
   - Methods: Chemical Vapor Deposition (CVD), Physical Vapor Deposition (PVD).

Introduction to IC Fabrication Processes

6. **Metallization**
   - Metal layers (usually aluminum or copper) are deposited to form interconnections.
   - These act as the wiring for the circuit components.
7. **Packaging**
   - The processed wafer is cut into individual chips (dies).
   - Each chip is packaged and connected to external pins for integration into electronic devices.

✓IC fabrication is a highly controlled, precise, and multi-step process that enables the production of compact, reliable, and high-performance electronic circuits used in everything from smartphones to computers.

THANK YOU